EPCET LIBRARY BANGALORE-49

CBCS SCHEME

USN | | | | | | | | | | |

21CV53

Fifth Semester B.E./B.Tech. Degree Examination, June/July 2026
Design of RC Structural Elements

Time: 3 hrs. Max. Marks: 100

Note: 1. ***Answer any FIVE full questions, choosing ONE full question from each module.***
2. ***Missing Data may be assumed suitably.***
3. ***Use of IS : 456 : 2000 and SP 16 are permitted.***

Important Note : 1. On completing your answers, compulsorily draw diagonal cross lines on the remaining blank pages.
2. Any revealing of identification, appeal to evaluator and /or equations written eg, 42+8 = 50, will be treated as malpractice.

Module-1

1 a. Explain working stress method and limit state method. **(08 Marks)**

b. Explain :
i) Characteristic Strength
ii) Characteristic Load
iii) Practical safety factor **(06 Marks)**

c. Explain :
i) Under Reinforced section
ii) Over reinforced section
iii) Balanced section **(06 Marks)**

OR

2 A simply supported beam of rectangular section 250 mm wide by 450 mm overall depth is used over an effective span of 4 m. The beam is reinforced with 3 bars of 20 mm dia, Fe415 bars at an effective depth of 400 mm. Two hanger bars of 10 mm diameter are provided. The self weight of the beam is 4 kN/m. Service load is 10 kN/m. Use M20 grade concrete. Compute :
i) Short term deflection
ii) Long term deflection **(20 Marks)**

Module-2

3 a. Enumerate at least three situations in which a doubly reinforced beam becomes necessary. **(05 Marks)**

b. An RCC beam (300 × 600)mm having 4-16ϕ as compression steel and 6-20ϕ has tension steel. The bars are located at 50 mm from respective edges. It is supported on a span of 9 m. Use M_{20} mix and Fe500 steel. Find super imposed load. **(15 Marks)**

OR

4 Calculate the moment of Resistance. Assuming M_{20} Mix and Fe415 grade steel.

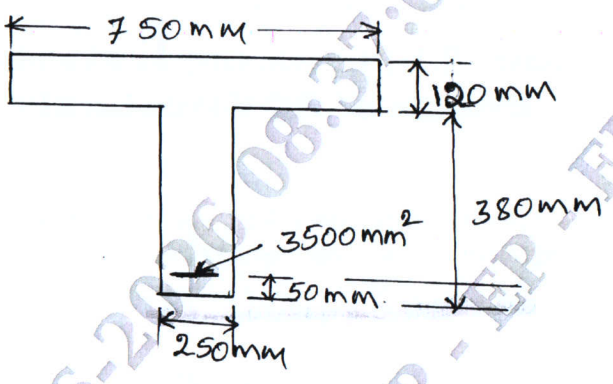

Fig Q4 **(20 Marks)**

Module-3

5 Design a simply supported rectangular beam to carry a live load of 20 kN/m. The span of the beam is 4m resting on 300 mm thick wall. The size of the beam restricted to (200 × 400) mm. Use M_{20} Mix and Fe 415 grade steel. Sketch the reinforcement details. **(20 Marks)**

OR

6 A floor of a hall measures (15m × 6m) the beams are spaced at 3m c/c. The slab thickness is 120 mm. The floor slab carries a live load of 5kN/m^2. Design an intermediate T-beam using M_{20} concrete and Fe 415 grade steel and sketch the details of reinforcement. **(20 Marks)**

Module-4

7 Design a one way continuous slab having 4 equal spans of 3 m each for a factored imposed load of 5kN/m^2. Use M_{20} concrete and Fe 415 steel. **(20 Marks)**

OR

8 Design dog legged staircase for a stair hall (4.75 × 3.1) m. Take rise and steps as 150 mm and 250 mm respectively. Width of stairs 1.5 m. Take live load 5 kN/m^2 and finishes 0.75 kN/m^2. Use M_{20} concrete and Fe 415 steel. Draw a neat sketch showing the details of reinforcement. **(20 Marks)**

Module-5

9 Design a short axially loaded circular column to carry a factored load of 1500 kN using M_{20} concrete and Fe 415 steel made. Sketch the reinforcement details. If factored moment of 150 kN-m is added on to this column what percentage increases in steel area is required? **(20 Marks)**

OR

10 Design a footing for a column carrying an axial load of 800 kN. The SBC of soil as 200 kN/m^2. Use M_{20} mix and Fe 415 steel. The column has (500 × 500) mm in cross section. **(20 Marks)**

* * * * *